TECHNICAL SPECIFICATIONS

	PARAMETERS	MEASUREMENTS
BODY DIMENSIONS	LENGTH	2020mm
	WIDTH	785mm
	HEIGHT	1103mm
	WHEEL BASE	1285mm
	GROUND CLEARANCE	160mm
	KERB WEIGHT	Disc 118kg, Drum 117kg
	SEAT LENGTH	705mm
	SEAT HEIGHT	790mm
	FUEL TANK CAPACITY	11L
ENGINE	TYPE	4 Stroke, SI Engine
	DISPLACEMENT	124cc
	MAX NET POWER	8kW @ 7500 rpm
	MAX NET TORQUE	10.9 N-m @ 6000 rpm
	FUEL SYSTEM	PGM-FI
	BORE x STROKE	50.0 X 63.1mm
	COMPRESSION RATIO	10.0:1
	STARTING METHOD	Self/Kick
TRANSMISSION	CLUTCH TYPE	Multiplate Wet Clutch
	NO. OF GEARS	5 Gears
TYRES & BRAKES	TYRE SIZE & TYPE (FRONT)	80/100-18 M/C 47P, Tubeless
	TYRE SIZE & TYPE (REAR)	80/100-18 M/C 54P, Tubeless
	BRAKE SIZE & TYPE (FRONT)	Disc 240mm, Drum 130mm
	BRAKE SIZE & TYPE (REAR)	Drum 130mm
FRAME & SUSPENSION	FRAME TYPE	Diamond Type
	FRONT SUSPENSION	Telescopic
	REAR SUSPENSION	Hydraulic Type
ELECTRICALS	BATTERY	12V, 5.0Ah
	HEAD LAMP	LED, DC

• +The technical specifications and design of the vehicle may vary according to the requirements and conditions without any notice • *Distance-to-empty, real time and average mileage readings may vary as per variant and riding conditions • SP 125 meets Bharat Stage VI norms • Product shown in the picture may vary from actual product available in the market • Accessories shown in the picture are not part of standard equipment • ^Mileage has increased by 16% for SP 125 as compared to BS IV to BS VI• **Conditions apply ^^Only rear tyre is HET.

MATTE AXIS GREY METALLIC

PEARL SIREN BLUE

STRIKING GREEN

IMPERIAL RED METALLIC

BEST DEAL HONDA Buy. Sell. Exchange | joyclub | ALWAYS WEAR A HELMET WHILE RIDING | Other Honda Shield Products** Annual Maintenance Contract Road Side Assistance Engine Health Assurance | Follow us on

Dealer Stamp:

Honda Motorcycle and Scooter India Pvt. Ltd.
Registered Office: Commercial Complex II, Sector - 49-50, Golf Course Extension Road, Gurugram - 122018 (Haryana)
Visit us at: www.honda2wheelersindia.com **Customer Care:** customercare@honda2wheelersindia.com

HONDA
The Power of Dreams

सच कर देंगे सपने

SP125
IT'S TIME TO BE ADVANCED
Experience thrilling performance and advanced technology come together in the SP 125. It comes with Honda's globally acclaimed Enhanced Smart Power (eSP) technology with an eco-friendly, BS-VI engine in a dynamic personality that makes for an equally smart and stylish ride. So, get ready to make a serious, attitude-packed style statement with a bike that's strictly for the advanced.

ADVANCED TECHNOLOGY

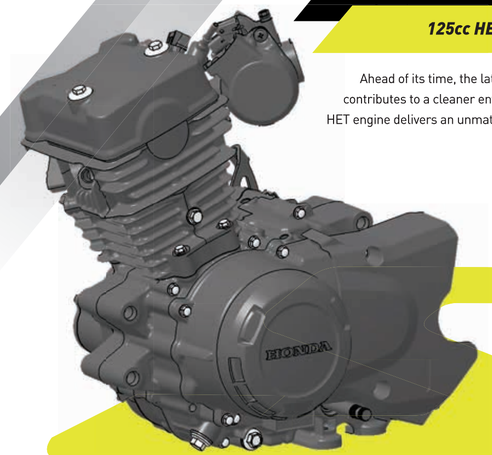

A QUIET REVOLUTION

HET BS-VI

125cc HET BS VI ENGINE

Ahead of its time, the latest innovation in engine contributes to a cleaner environment. The intelligent HET engine delivers an unmatched performance.

eSP ENHANCED SMART POWER

eSP

With SP 125, expect nothing but the best. Honda's Enhanced Smart Power (eSP) technology maximizes performance and fuel-efficiency by reducing friction. The ACG starter integrated with eSP technology starts the engine quietly giving you the best of riding experience and technology.

1ST IN SEGMENT

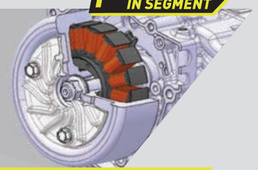

SILENT START WITH ACG

Honda's unique ACG starter motor removes gear meshing noise and helps start the engine without a jolt.

PGM-FI FUEL INJECTION

PGM-FI

PGM-FI system with 8 sensors constantly injects optimum fuel and air mixture resulting in efficient combustion that aids in consistent power output and higher mileage.

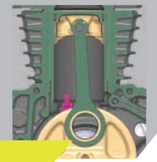

FRICTION REDUCTION

The piston cooling jet reduces friction and maintains optimum engine temperature. The offset crank, rocker roller arm fitted with needle bearing further reduces the frictional losses in the engine.

ADVANCED TECHNOLOGY

16% MORE MILEAGE

MILEAGE UP

A completely new engine powered by Honda's globally acclaimed eSP Technology delivers 16%^ higher mileage.

1ST IN SEGMENT

FULL DIGITAL METER

Always stay up-to-date with the Full Digital Meter which displays Real-time Fuel-efficiency, Average Fuel efficiency, Distance-to-empty, Service Due Indicator, Gear Position Indicator & Eco Indicator.

HET TYRE

HET TUBELESS TYRE^^

Honda's low-rolling resistance tubeless tyre is specially designed to increase fuel-efficiency.

ADVANCED STYLE

AGGRESSIVE TANK DESIGN WITH EDGY GRAPHICS

A definite head-turner, the muscular fuel tank design with edgy graphics makes it very appealing.

MODERN HEADLAMP DESIGN

A sure shot style statement, the sharp headlamp with its excellent illumination creates a lasting first impression.

SPORTY SPLIT ALLOY WHEELS

A split second is all you'll need to make your presence felt with the distinctive 5-spoke Split Alloy Wheels.

BOLD REAR STANCE WITH TAIL LAMP

The bold rear seamlessly integrates the tail lamp with the body enhancing the design statement.

PREMIUM CHROME MUFFLER COVER

Stylish Chrome Muffler enhances the sporty looks.

ADVANCED COMFORT & CONVENIENCE

1ST IN SEGMENT

SHARP LED DC HEADLAMP

The Sharp LED DC Headlamp gives consistent illumination while riding irrespective of the speed and riding conditions.

1ST IN SEGMENT

ENGINE START/STOP SWITCH

Start and stop your bike with just the flick of a switch anytime, anywhere. Enjoy enhanced convenience.

1ST IN SEGMENT

INTEGRATED HEADLAMP BEAM & PASSING SWITCH

Integrated Smart Single Switch for passing signal and low/high beam.

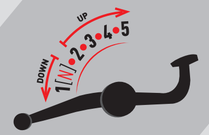

5-SPEED TRANSMISSION

Enhance the smooth yet thrilling ride experience with 5-Speed transmission.

5-STEP ADJUSTABLE REAR SUSPENSION

Makes your ride comfortable with 5 Step Adjustable Rear Suspension on all road conditions.

Honda Shield 3+3 years warranty

1ST IN SEGMENT

3 + 3 YEARS WARRANTY PACKAGE

Complete peace of mind with 6 years warranty package, comprising of 3 years standard and 3 years optional service warranty.

CBS WITH EQUALIZER

The Combi-Brake System with Equalizer reduces braking distance, so you can ride with confidence.

SEAL CHAIN

The Seal Chain is low on maintenance and high on durability for a hassle-free riding experience.